COPY TO	Q'TY

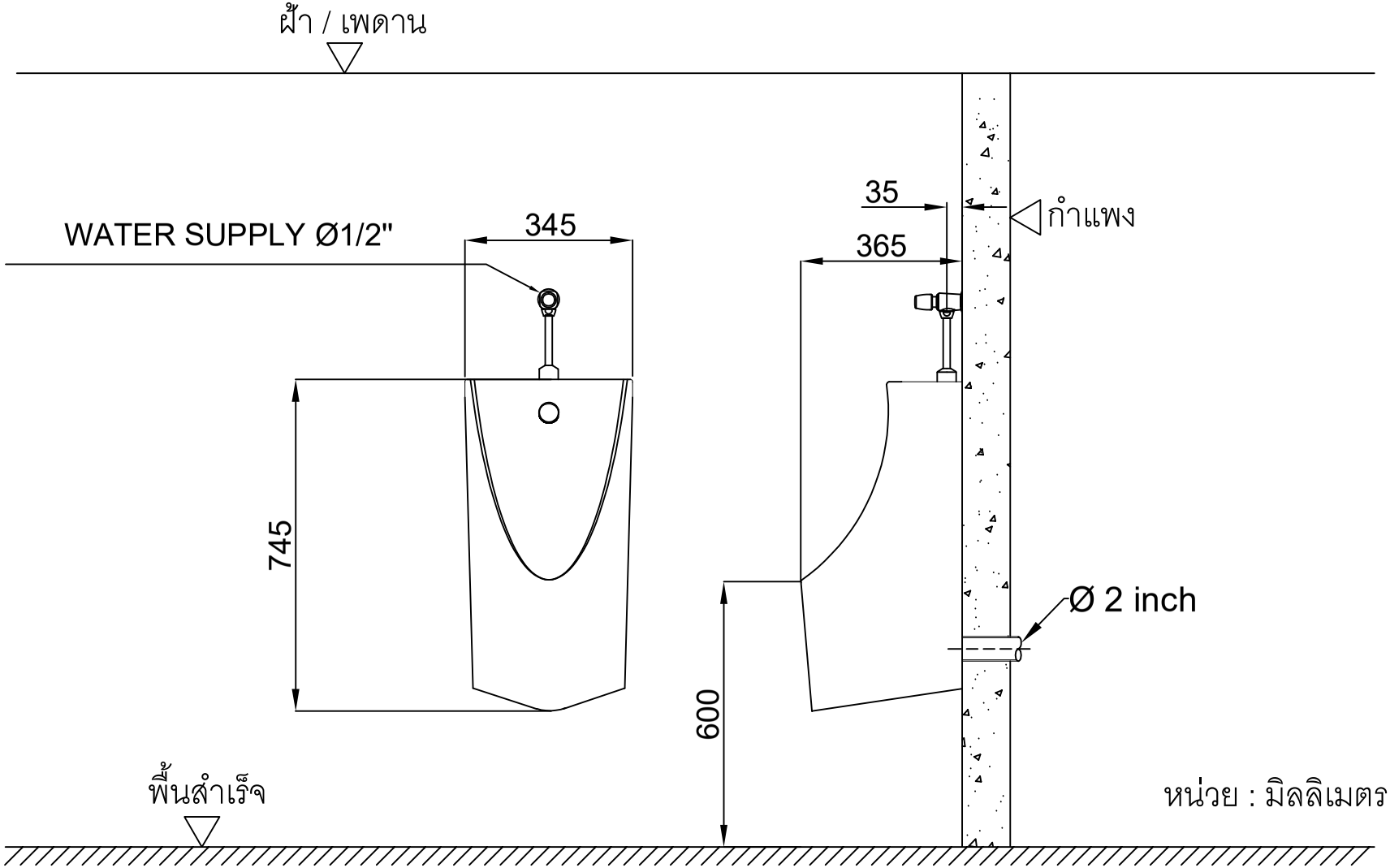

UNIT
mm

SCALE
1:1

DESIGNED
C.TIRAWAT
06/04/2026

DRAWN
C.TIRAWAT
06/04/2026

CHECKED

APPROVAL

MATERIAL	Q'TY					
-	- SET	B				
		A	DATE	REVISION	CHECKED	R.NO.

TOLERANCE ± 0.2	MODEL	PART CODE
UP TO	-	AT-376
OVER		

THAIFAST ELECTRIC CORPORATION LIMITED
162 MOO 17 SOI KRITTAYA 2 TAMBON BANG PHLI YAI
AMPHUR BANGPHLI SAMUT PRAKAN 10540
TEL. 02-041-7413 , 02-041-7423 , 02-041-7433

PART NAME
Manually Operated Men's Urinal